south
mountain
COMPANY

February 14, 2020

West Tisbury Zoning Board of Appeals
1059 State Road - PO Box 278
West Tisbury MA 02575

RE: Blue Heron Farm LLC Ground Mount Solar

Dear Members of the Board,

On behalf of our client, Blue Heron LLC, we are filing a Special Permit application under the following sections of the West Tisbury Zoning Bylaw for the proposed construction of a free standing ground mounted solar array.

Section 8.10-4(C) & 4.2-2(D)3 &4.2-2(D)4:

4.2-2(D)3 – Any swimming pool, tennis court, or other accessory structure or use with a footprint greater than 600 square feet, if in front of the principal building, be set back at least twice the minimum front setback distance.

4.2-2 (D)4 - Non-habitable detached or attached accessory structures which do not meet the setback requirements of this Subsection 4.2-2(D)4 may be allowed by Special Permit from the Zoning Board of Appeals, providing that the Board finds such structures to be in harmony with the residential development in the zoning district and not detrimental to the neighborhood.

8.10-4(C) – Ground or pole-mounted systems located within the front yard

Please find the following information regarding this application:

1. Three copies of the application for hearing
2. Three copies of the site plan
3. Three copies of Scaled drawing of the Canopy
4. Solar Module spec sheet
5. Inverter spec sheet
6. Electrical one line diagram
7. Three copies of a Brief to the board
8. Check for filing fee ($200)

Your consideration of this matter is appreciated. Please feel free to contact me with any questions.

Sincerely,

John Guadagno
Project Manager
South Mountain Company

15 RED ARROW ROAD • PO BOX 1260 • WEST TISBURY, MA 02575 • TEL 508.693.4850 • FAX 508.693.7738
SOUTHMOUNTAIN.COM ARCHITECTURE • BUILDING • ENERGY

Received by the Town Clerk: Date: _____

Application complete ____

Application incomplete ___

Signed: _____

APPLICATION COVER PAGE

Date: 2/13/20 Date Received by ZBA: _____

Name of Applicant and Mailing Address: John Guadagno - South Mountain Company
PO Box 1206 West Tisbury MA 02575

Email Address: _____ Telephone Number: 508-693-4850
jguadagno@southmountain.com

Name of Owner and Mailing Address (If not Applicant): _____

Blue Heron LLC PO Box 110 East Rockaway NY 11518

Map and Lot #: Map 35 Lot 1 block 9

Street Address of Subject Property: 99 Pond View Road

Applicant is: Installer (Owner, Tenant, Purchaser, Other)

Nature of Application (Special Permit, Appeal, Variance): Special Permit

Applicable Section of Zoning Bylaw: 8.10-4(C) 4.2-2(D)4 4.2-2(D)3

Date of Denial by Building Inspector, Zoning Inspector, or Planning Board (If Applicable): 2/13/2020

_____Plot Plan: Must provide a plan by a registered surveyor showing the total property with the existing buildings, including the proposed project, all setback distances to be provided.

_____Plans: 2 sets of scaled drawings of floor plans that show total sq. ft. per floor (measured from exterior of wall), at least 2 elevations with one showing proposed height to ridge. If the project is an addition to existing structure please clearly identify proposed work.

_____Description of proposed project: Please attach a detailed narrative.

I have read the overview of the ZBA process attached to this application and completed all sections of the application cover page and therefore request a hearing before the West Tisbury Zoning Board of Appeals with reference to the above noted application.

Signed: John Guadagno
South Mountain Company

Title(s): Project Manager

Application fee of $200.00 is required. Date Paid: _____

FOR ZONING BOARD USE

Size of Subject Lot: _____ Zoning District: _____

Registry Book and Page #'s and Date _____

Other Boards Involved with the Permitting:

_____

Within an Overlay District?

_____

Martha's Vineyard Commission Referral Required? _____ If So, MV Checklist Items:

_____

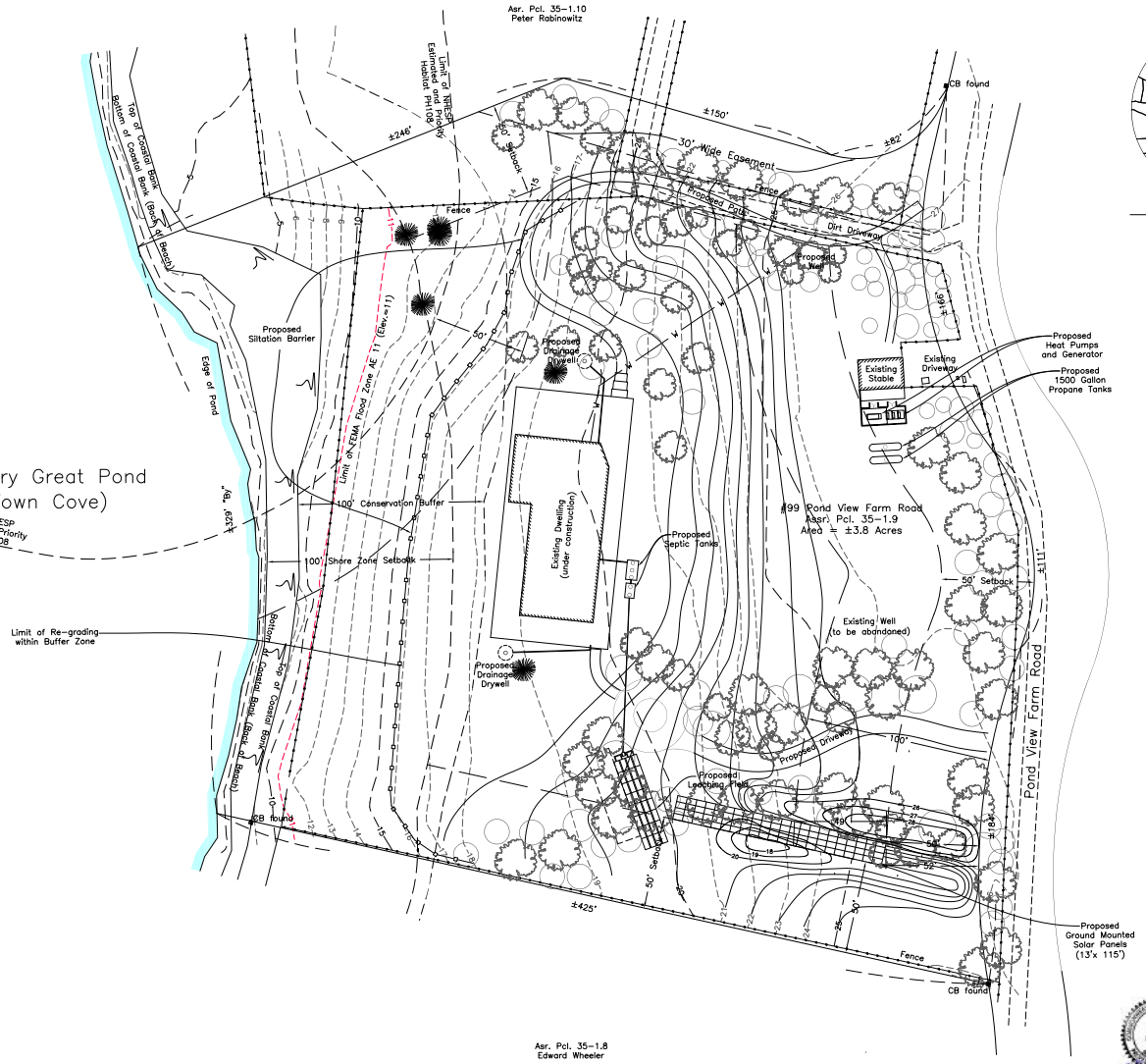

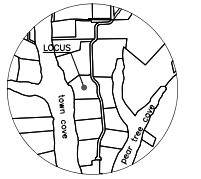

LOCUS MAP
Scale 1:1000

N
W E

Notes:

1. Zoning District: RU (Rural)
2. Setbacks: 50' All Sides
3. This lot is located within the Coastal District
4. FEMA Flood Zone = AE 11 (Elevation 11)
5. Elevation Datum: N.A.V.D 88

Legend:

..... Denotes Existing Cedar Tree

..... Denotes Proposed Evergreen Tree

..... Denotes Proposed Deciduous Tree

March 25, 2020

Site Plan in
West Tisbury, Mass.
Prepared for
Blue Heron LLC
Scale 1" = 30'
March 5, 2020
Revised:March 20, 2020

VINEYARD LAND SURVEYING & ENGINEERING
12 Cournoyer Road
P.O. Box 421
West Tisbury, MA 02575
P 508-693-3774 F 508-629-0440
Vls.net

e:\survey\9\934-9\carlson 934-9\934-9.dwg

Job No 934-10

Aerial View

50′ Setback - PV Panels Pushed Down and Hidden with Berm

NOTES: UNLESS OTHERWISE SPECIFIED

1. THIS DRAWING IS NOT FOR CONSTRUCTION UNTIL ENGINEERING HAS REVIEWED AND STAMPED THIS DOCUMENT.
2. DIMENSIONS SHOWN ARE INCHES.
3. THE SELF-BONDING SYSTEM AND SINGLE GROUND LUG IS FOR USE WITH PV MODULES THAT HAVE A MAXIMUM SERIES FUSE RATING OF 30A.
4. MATERIALS ARE AS SPECIFIED OR EQUIVALENT:
   HARDWARE: 304 STAINLESS STEEL
   FABRICATED EXTRUDED PARTS: 6005-T5 ALUMINUM ALLOY
   FABRICATED DIE CAST PARTS: ANSI/AA A380 ALUMINUM ALLOY
   STEEL PIPE: SCHEDULE 40 GALVANIZED
   ALUMINUM PIPE: SCHEDULE 10 ANODIZED
5. THE MAXIMUM PERMISSIBLE LENGTH OF ANY STRUCTURE SHALL BE 200 FT. FOR SYSTEMS USING A SHARED RAIL CONFIGURATION, A THERMAL BREAK IS REQUIRED IN THE RAIL EVERY 40 FT. PER THE DRAWING DETAILS.
6. 4LX20-30DEG-STR-GSM-AGM-BGM-PGM
7. APPROVED RAIL PROFILES
   VARY BASED ON ENGINEERING REQUIREMENTS. CONFIRM SELECTION WITH STRUCTURAL ENGINEER. SEE BOM IN BOTTOM RIGHT CORNER.
8. K10224-XXX END CLAMP KIT OR K10299-XXX ADJ. END CLAMP KIT.
9. FOUNDATION TYPES:
   GSM = GROUND SCREW GROUND MOUNT
   AGM = HELICAL AUGER GROUND MOUNT
   PGM = POST-IN-CONCRETE GROUND MOUNT
   BSM = BALLAST GROUND MOUNT
10. 1 OF 1 ARRAY TYPES.
11. 1 ARRAY TOTAL

PACKET A6	
Model Code	ASCE 7-10
Exposure Category	C
Wind Speed	140
Ground Snow Load	30
Tilt	30

4LX20 ARRAY

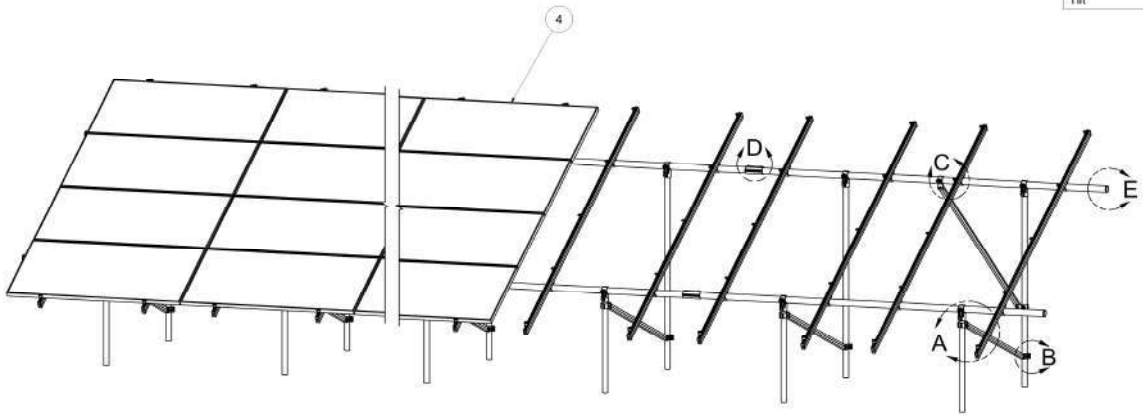

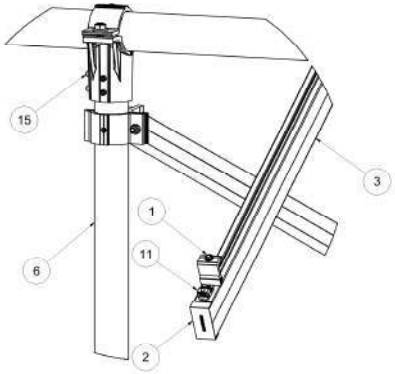

DETAIL A

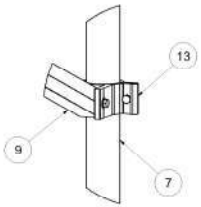

DETAIL B

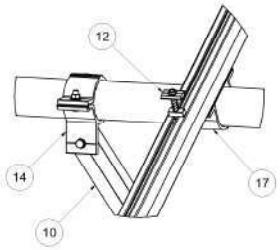

DETAIL C

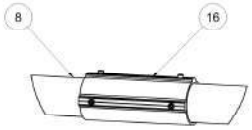

DETAIL D

DETAIL E

ITEM	PART NUMBER	DESCRIPTION	QTY
17	K10343-002	2.5" AL PIPE U-BOLT KIT	80
16	K10342-001	2.5" PIPE SPLICE KIT	14
15	K10341-001	2.5" PIPE TEE KIT	34
14	K10222-001	2.5" PIPE CLAMP KIT	2
13	K10219-001	2 PIPE CLAMP KIT	36
12	K10180-001	GROUNDING MID-CLAMP KIT WITH T COLLAR BOLT AND GROUNDING BASE	120
11	K10179-001	SELF-GROUNDING LUG KIT	1
10	A50164-092	1.5" SQ. STL TUBE BRACE,	17
9	A50164-066	1.5" SQ. STL TUBE BRACE,	2
8	A21168-166	PIPE, HSS, 2.875" OD X 12 GAUGE	15
7	A21165-060	PIPE, HSS, 2.375" OD X 12 GAUGE	17
6	A21165-120	PIPE, HSS, 2.375" OD X 12 GAUGE	17
5	A20380-001	2.5" PIPE END CAP (OPTIONAL)	4
4		PANEL 1557X1046X46mm	40
3	A20288-206-	HELIO RAIL HR300, 206"	40
2	A20297-001	RAIL END CAP	80
1		END CLAMP KIT.VARIES PER NOTE 8	80

SEE BOM

Third Angle Projection

GENERAL SPECIFICATIONS
+/- 0.030 [mm] [0.8]
ANGULAR: +/- 0.5 [deg]
X.X +/- 0.1 [mm]
X.XX +/- 0.05 [mm]
X.XXX +/- 0.025 [mm]
Break all sharp edges 0.15 [0.5] x 45 [deg]
Remove burrs and blend corners to 0.25 [mm]

DRAWN BY: KYY 08/16/2019
CHECKED BY:
APPROVED BY:

SunModo Corp.
14800 NE 65TH STREET, VANCOUVER WA 98682

TITLE: BLUE HERON

DRAWING NUMBER: D 191211.BLU.1

SCALE: N.T.S. SHEET 1 of 4

THIS DRAWING IS CONFIDENTIAL PROPERTY OF SUNMODO AND ITS CONTENTS MAY NOT BE DISCLOSED WITHOUT THE PRIOR WRITTEN CONSENT OF SUNMODO CORP.

NOTES:

1. DIMENSIONS LABELED AS MAX ARE MAXIMUM ALLOWABLE AND MAY RESULT IN END POSTS BEING OUTSIDE ARRAY EDGES. MAXIMUM DIMENSIONS MAY BE REDUCED IF DESIRED.

RAIL SPACING

LANDSCAPE: PER PANEL MANUFACTURER

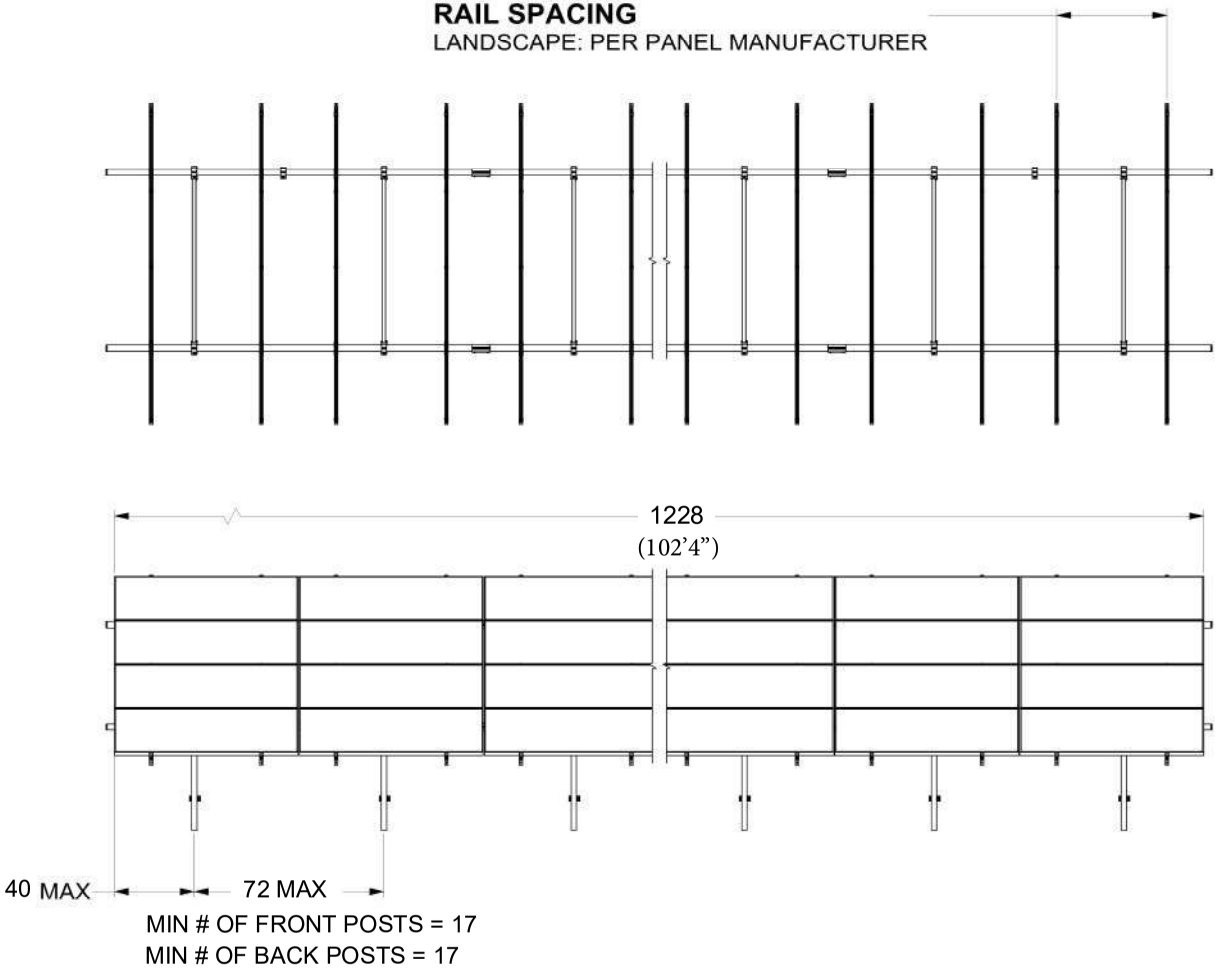

MIN # OF FRONT POSTS = 17

MIN # OF BACK POSTS = 17

SunModo Corp.	
BLUE HERON	
D	191211.BLU.1
N.T.S.	SHEET 2 of 4

NOTES:
1. MAX DENOTES MAXIMUM PERMISSIBLE DIMENSIONS.
2. PIPE IS DESIGNED TO TELESCOPE IN AND OUT OF SCREW/AUGER FOR FIELD ADJUSTABILITY. 12" IS RECOMMENDED.

DIMENSIONS	
A	172
B	40
C	31
D	77
E	18
F	80
G	97

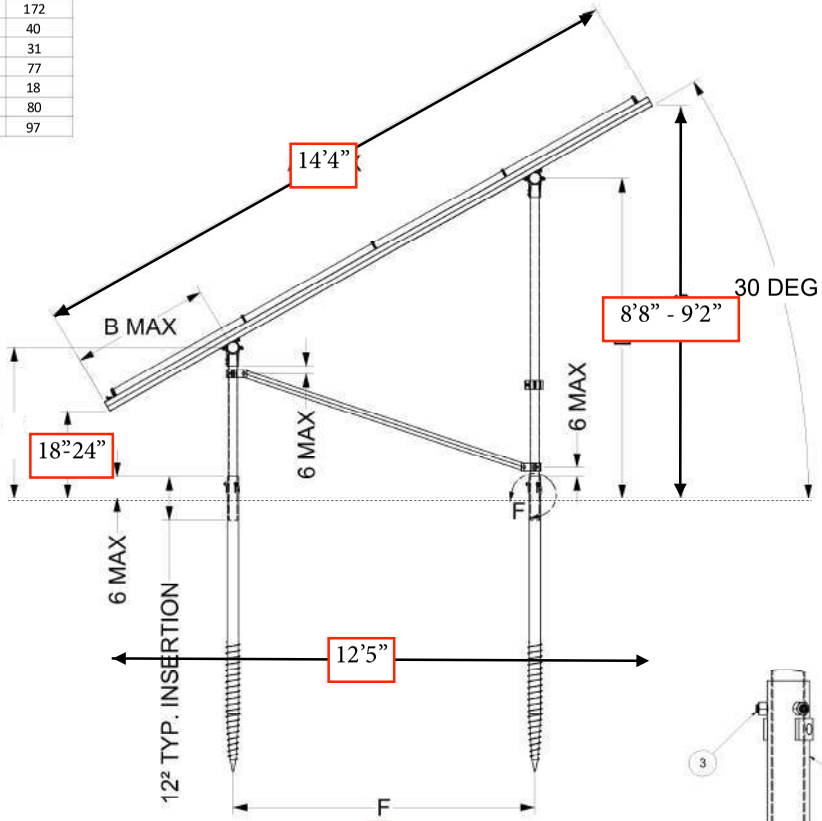

GROUND SCREW GOUND MOUNT (GSM)

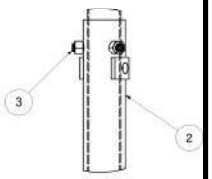

DETAIL F

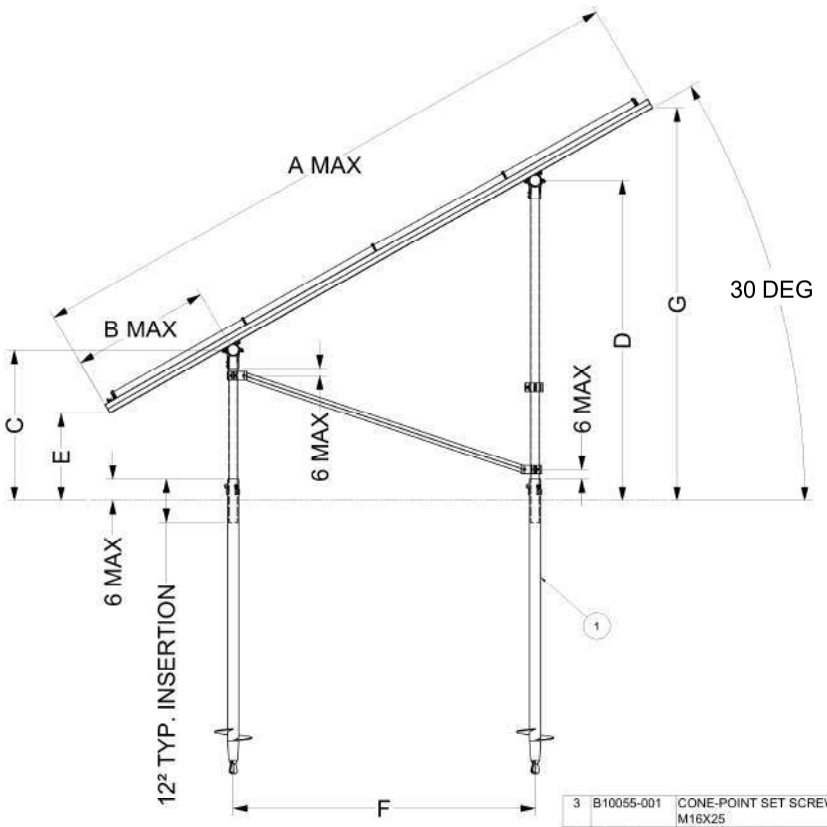

AUGER GROUND MOUNT (AGM)

ITEM	PART NUMBER	DESCRIPTION	QTY
3	B10055-001	CONE-POINT SET SCREW M16X25	102
2	A21147	ANCHOR, SCREW AUGER	34
1	A21146	ANCHOR, 10" HELIX BLADE AUGER	0

SunModo Corp.

BLUE HERON

D 191211.BLU.1

SCALE N.T.S. SHEET 3 of 4 REV

SunPower® X-Series Residential Solar Panels | X22-360

More than 22% Efficiency

Ideal for roofs where space is at a premium or where future expansion might be needed.

Maximum Performance

Designed to deliver the most energy in demanding real-world conditions, in partial shade and hot rooftop temperatures.[1,2,4]

Premier Technology

Engineered with the newest and most powerful Maxeon technology, X-Series brings unmatched power and performance to your home.

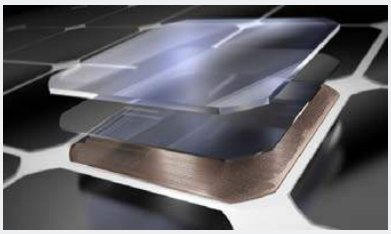

Maxeon® Solar Cells: Fundamentally better
Engineered for performance, designed for durability.

Engineered for Peace of Mind

Designed to deliver consistent, trouble-free energy over a very long lifetime. [3,4]

Designed for Durability

The SunPower Maxeon Solar Cell is the only cell built on a solid copper foundation. Virtually impervious to the corrosion and cracking that degrade conventional panels. [3]

Same excellent durability as E-Series panels.
#1 Rank in Fraunhofer durability test.[9]
100% power maintained in Atlas 25+ comprehensive durability test.[10]

High Performance & Excellent Durability

SPR-X22-360

X22 SERIES

Highest Efficiency[5]

Generate more energy per square foot

X-Series residential panels convert more sunlight to electricity by producing 38% more power per panel[1] and 70% more energy per square foot over 25 years.[1,2,3]

Highest Energy Production[6]

Produce more energy per rated watt

High year-one performance delivers 8–10% more energy per rated watt.[2] This advantage increases over time, producing 21% more energy over the first 25 years to meet your needs.[3]

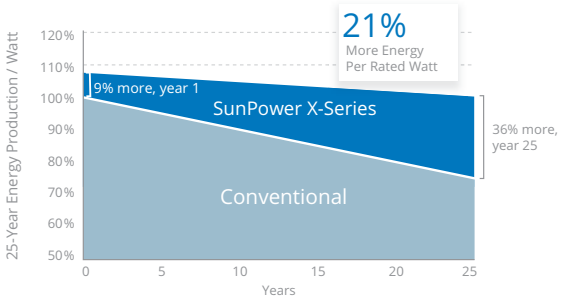

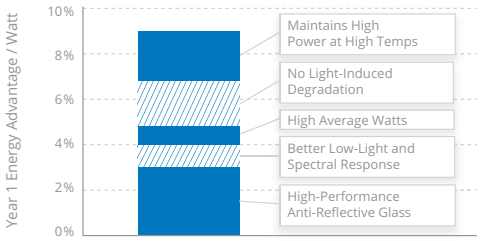

SunPower® X-Series Residential Solar Panels | X22-360

SunPower Offers The Best Combined Power And Product Warranty

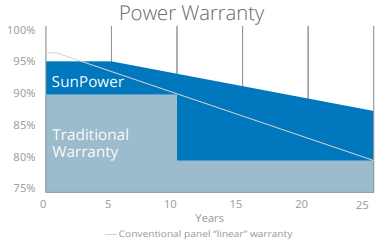

More guaranteed power: 95% for first 5 years, −0.4%/yr. to year 25 [7]

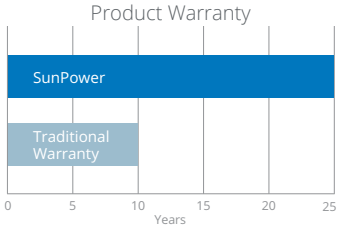

Combined Power and Product defect 25-year coverage [8]

Electrical Data	
	SPR-X22-360
Nominal Power (Pnom)[11]	360 W
Power Tolerance	+5/-0%
Avg. Panel Efficiency[12]	22.2%
Rated Voltage (Vmpp)	59.1 V
Rated Current (Impp)	6.09 A
Open-Circuit Voltage (Voc)	69.5 V
Short-Circuit Current (Isc)	6.48 A
Max. System Voltage	600 V UL & 1000 V IEC
Maximum Series Fuse	15 A
Power Temp Coef.	–0.29% / ° C
Voltage Temp Coef.	-167.4 mV / ° C
Current Temp Coef.	2.9 mA / ° C

Tests And Certifications	
Standard Tests[13]	UL1703 (Type 2 Fire Rating), IEC 61215, IEC 61730
Quality Certs	ISO 9001:2008, ISO 14001:2004
EHS Compliance	RoHS, OHSAS 18001:2007, lead free, REACH SVHC-163, PV Cycle
Sustainability	Cradle to Cradle Certified™ Silver (eligible for LEED points)[14]
Ammonia Test	IEC 62716
Desert Test	10.1109/PVSC.2013.6744437
Salt Spray Test	IEC 61701 (maximum severity)
PID Test	Potential-Induced Degradation free: 1000 V[9]
Available Listings	UL, TUV, JET, CEC

Operating Condition And Mechanical Data	
Temperature	–40° F to +185° F (–40° C to +85° C)
Impact Resistance	1 inch (25 mm) diameter hail at 52 mph (23 m/s)
Appearance	Class A+
Solar Cells	96 Monocrystalline Maxeon Gen III
Tempered Glass	High-transmission tempered anti-reflective
Junction Box	IP-65, MC4 compatible
Weight	41 lbs (18.6 kg)
Max. Load	Wind: 62 psf, 3000 Pa, 305 kg/m² front & back Snow: 125 psf, 6000 Pa, 611 kg/m² front
Frame	Class 1 black anodized (highest AAMA rating)

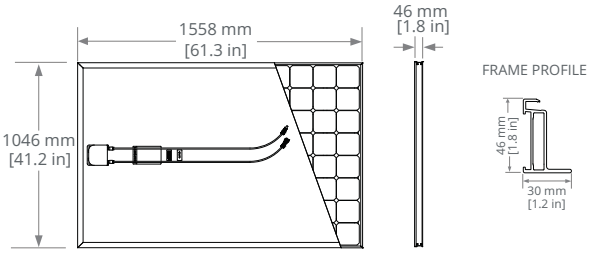

Please read the safety and installation guide.

REFERENCES:
1 All comparisons are SPR-X21-345 vs. a representative conventional panel: 250 W, approx. 1.6 m², 15.3% efficiency.
2 Typically 8–10% more energy per watt, BEW/DNV Engineering "SunPower Yield Report," Jan 2013.
3 SunPower 0.25%/yr degradation vs. 1.0%/yr conv. panel. Campeau, Z. et al. "SunPower Module Degradation Rate," SunPower white paper, Feb 2013; Jordan, Dirk "SunPower Test Report," NREL, Q1-2015.
4 "SunPower Module 40-Year Useful Life" SunPower white paper, May 2015. Useful life is 99 out of 100 panels operating at more than 70% of rated power.
5 Highest of over 3,200 silicon solar panels, Photon Module Survey, Feb 2014.
6 1% more energy than E-Series panels, 8% more energy than the average of the top 10 panel companies tested in 2012 (151 panels, 102 companies), Photon International, Feb 2013.
7 Compared with the top 15 manufacturers. SunPower Warranty Review, May 2015.
8 Some restrictions and exclusions may apply. See warranty for details.
9 X-Series same as E-Series, 5 of top 8 panel manufacturers tested in 2013 report, 3 additional panels in 2014. Ferrara, C., et al. "Fraunhofer PV Durability Initiative for Solar Modules: Part 2". Photovoltaics International, 2014.
10 Compared with the non-stress-tested control panel. X-Series same as E-Series, tested in Atlas 25+ Durability test report, Feb 2013.
11 Standard Test Conditions (1000 W/m² irradiance, AM 1.5, 25° C). NREL calibration Standard: SOMS current, LACCS FF and Voltage.
12 Based on average of measured power values during production.
13 Type 2 fire rating per UL1703:2013, Class C fire rating per UL1703:2002.
14 See salesperson for details.

See www.sunpower.com/facts for more reference information.
For more details, see extended datasheet: www.sunpower.com/datasheets.

Document # 514618 Rev B /LTR_US

©December 2016 SunPower Corporation. All rights reserved. SUNPOWER, the SUNPOWER logo, MAXEON, SIGNATURE and InvisiMount are trademarks or registered trademarks of SunPower Corporation. Specifications included in this datasheet are subject to change without notice.

SUNPOWER®

Single Phase Inverter with HD-Wave Technology

for North America

SE3000H-US / SE3800H-US / SE5000H-US / SE6000H-US / SE7600H-US / SE10000H-US / SE11400H-US

INVERTERS

12-25 YEAR WARRANTY

Optimized installation with HD-Wave technology

- Specifically designed to work with power optimizers
- Record-breaking efficiency
- Quick and easy inverter commissioning directly from a smartphone using the SolarEdge SetApp
- Fixed voltage inverter for longer strings
- Integrated arc fault protection and rapid shutdown for NEC 2014 and 2017, per article 690.11 and 690.12
- UL1741 SA certified, for CPUC Rule 21 grid compliance
- Extremely small
- Built-in module-level monitoring
- Outdoor and indoor installation
- Optional: Revenue grade data, ANSI C12.20 Class 0.5 (0.5% accuracy)

/ Single Phase Inverter with HD-Wave Technology for North America

SE3000H-US / SE3800H-US / SE5000H-US / SE6000H-US/ SE7600H-US / SE10000H-US / SE11400H-US

Model Number	SE3000H-US	SE3800H-US	SE5000H-US	SE6000H-US	SE7600H-US	SE10000H-US	SE11400H-US	
APPLICABLE TO INVERTERS WITH PART NUMBER	SEXXXXH-XXXXXBXX4							
OUTPUT								
Rated AC Power Output	3000	3800 @ 240V 3300 @ 208V	5000	6000 @ 240V 5000 @ 208V	7600	10000	11400 @ 240V 10000 @ 208V	VA
Maximum AC Power Output	3000	3800 @ 240V 3300 @ 208V	5000	6000 @ 240V 5000 @ 208V	7600	10000	11400 @ 240V 10000 @ 208V	VA
AC Output Voltage Min.-Nom.-Max. (211 - 240 - 264)	✓	✓	✓	✓	✓	✓	✓	Vac
AC Output Voltage Min.-Nom.-Max. (183 - 208 - 229)	-	✓	-	✓	-	-	✓	Vac
AC Frequency (Nominal)	59.3 - 60 - 60.5[1]							Hz
Maximum Continuous Output Current @240V	12.5	16	21	25	32	42	47.5	A
Maximum Continuous Output Current @208V	-	16	-	24	-	-	48.5	A
Power Factor	1, adjustable -0.85 to 0.85							
GFDI Threshold	1							A
Utility Monitoring, Islanding Protection, Country Configurable Thresholds	Yes							
INPUT								
Maximum DC Power @240V	4650	5900	7750	9300	11800	15500	17650	W
Maximum DC Power @208V	-	5100	-	7750	-	-	15500	W
Transformer-less, Ungrounded	Yes							
Maximum Input Voltage	480							Vdc
Nominal DC Input Voltage	380				400			Vdc
Maximum Input Current @240V[2]	8.5	10.5	13.5	16.5	20	27	30.5	Adc
Maximum Input Current @208V[2]	-	9	-	13.5	-	-	27	Adc
Max. Input Short Circuit Current	45							Adc
Reverse-Polarity Protection	Yes							
Ground-Fault Isolation Detection	600kΩ Sensitivity							
Maximum Inverter Efficiency	99	99.2						%
CEC Weighted Efficiency	99						99 @ 240V 98.5 @ 208V	%
Nighttime Power Consumption	< 2.5							W

[1] For other regional settings please contact SolarEdge support
[2] A higher current source may be used; the inverter will limit its input current to the values stated

SYSTEM DETAILS

BLUE HERON LLC
99 POND VIEW FARM ROAD
WEST TISBURY, MA 02575

28.8kW DC, 25.0kW AC
GROUND MOUNTED PHOTOVOLTAIC SYSTEM

SHEET INDEX

SHEET NUMBER	TITLE
PV-G.0	COVER PAGE
PV-A.1	ARRAY LAYOUT
PV-E.1	ELECTRICAL THREE LINE
PV-E.2	ELECTRICAL CALCS
PV-E.3	ELECTRICAL CALCS
PV-E.4	PLACARDS
PV-E.5	PLACARDS

VICINITY MAP

N

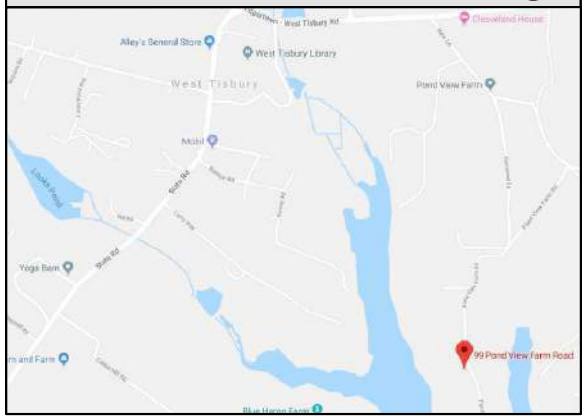

SITE PLAN

N

PHOTOVOLTAIC SYSTEM DETAIL

ITEM	DETAIL	QTY
SYSTEM SIZE, STC, DC	28.8kW	N/A
MODULE RATING, STC, DC	360W	80
INVERTER	SOLAREDGE - 2 X SE10000H-US & 1 X SE5000H-US	3
RACKING SYSTEM	SUNMODO SUNTURF GROUND MOUNT SYSTEM	N/A
DATA ACQUISITION	SOLAR EDGE INVERTER DIRECT	N/A

DESIGN CRITERIA

DESIGN WIND LOAD	140 MPH 3-SEC GUST
DESIGN SNOW LOAD	25 PSF ROOF LOAD
EXPOSURE CATEGORY	C
HIGH TEMP (ASHRAE 2% HIGH)	27°C
LOW TEMP (ASHRAE EXTREME LOW)	-17°C
ARRAY TYPE	GROUND MOUNT

CONTACT INFORMATION

SMC POINT OF CONTACT	JOHN GUADAGNO
EMAIL ADDRESS	JGUADAGNO@SOUTHMOUNTAIN.COM
PHONE NUMBER	508.693.4850

AUTHORITY HAVING JURISDICTION

BUILDING AUTHORITY	WEST TISBURY
CODE REFERENCE	2017 NEC
ELECTRICAL UTILITY COMPANY	EVERSOURCE

CONTRACTOR:

south mountain COMPANY

15 Red Arrow Rd, West Tisbury, MA 02575
www.SouthMountain.com • 508.693.7738

DESIGNER:

namasté SOLAR

6707 Winchester Circle, Boulder, CO 80301
888 Federal Blvd., Denver, CO 80204
www.NamasteSolar.com • 303.447.0300

NAMASTE POINT OF CONTACT:

NAME:
KIM ABCOUWER
EMAIL:
KIM.ABCOUWER@NAMASTESOLAR.COM
PHONE:
303.447.0300X211

OWNER:

BLUE HERON LLC
99 POND VIEW FARM ROAD
WEST TISBURY, MA 02575

SOLAR INDIVIDUAL PERMIT PACKAGE

SYSTEM ATTRIBUTES:

SYSTEM SIZE:
28.8 KW
TOTAL # OF MODULES:
80
MODULE:
SUNPOWER
SPR-X22-360-WHT
INVERTER(S):
SOLAREDGE
2 X SE10000H-US & 1 X SE5000H-US

SCALE:
NTS

DWG TITLE:
COVER PAGE

SHEET #	REVISION #
PV-G.0	02

ELECTRICAL THREE-LINE

EQUIPMENT SCHEDULE

KEY	QTY	MAKE	MODEL	LOCATION	NOTES
1	80	SUNPOWER	SPR-X22-360-WHT	FLUSH MOUNTED TO ROOF	PV MODULE
2	80	SOLAREDGE	P400	MOUNTED ON RACKING	POWER OPTIMIZER
3	1	SOLAREDGE	SE5000H-US	EXTERIOR - UNDER ARRAY	DC DISCONNECT INTEGRATED INVERTER
4	2	SOLAREDGE	SE10000H-US	EXTERIOR - UNDER ARRAY	DC DISCONNECT INTEGRATED INVERTER
5	1	TBD	TBD	EXTERIOR - UNDER ARRAY	PV AC COMBINER PANEL, 150A BUS
6	1	TBD	TBD	EXTERIOR - CORRAL	150A FUSED DISCONNECT W/ VISIBLE, LOCKABLE BLADES, ACCESSABLE BY UTILITY 24/7
7	1	TBD	TBD	EXTERIOR - CORRAL	TRANSFER SWITCH
8	1	TBD	TBD	EXTERIOR - PEDESTAL	MAIN DISCONNECT, 2 X 200A MAIN
9	1	TBD	TBD	EXTERIOR - PEDESTAL	UTILITY METER, 240V W/O #02381906
10	1	TBD	TBD	INTERIOR - MAIN HOUSE	MAIN SERVICE PANEL 1, 200A BUS, 200A MAIN
11	1	TBD	TBD	INTERIOR - MAIN HOUSE	MAIN SERVICE PANEL 2, 200A BUS, 200A MAIN
12	1	TBD	TBD	EXTERIOR - CORRAL	EVERSOURCE METER FOR SMART

ELECTRICAL NOTES

GENERAL
1. PLACARDING AS REQUIRED PER 690.13, .15, .31, .51, .52, .53, .54, .56, 705.10, 705.12
2. PLACARD AT METER INDICATING "PHOTOVOLTAIC SYSTEM CONNECTED"
3. SERVICE DISCONNECTS SHALL BE GROUPED AND/OR MARKED WITH LOCATION DESCRIPTION(S)
4. GEC SHALL BE CONTINUOUS PER 250.64(C)
5. MODULES BOND TO RACKING VIA SUN TURF MID CLAMP
6. MINIMUM WIRE SIZES BASED ON A TOTAL SYSTEM VOLTAGE DROP OF LESS THAN 1%

INTERCONNECTION:
LOAD-SIDE TAP, IN TRANSFER SWITCH

CONDUCTOR SCHEDULE

KEY	CONDUCTORS	CU/AL	TYPE	LOCATION	RACEWAY
A1	UP TO 4-#10 PV WIRE, 1-#6 EGC BARE	CU	PV WIRE	ARRAY	FREE AIR
A2	UP TO 6-#10 PV WIRE, 1-#6 EGC BARE	CU	PV WIRE	ARRAY	FREE AIR
B1	3-#10, 1-#10 EGC, 1/2" OR LARGER RACEWAY	CU	THHN/THWN2	EXTERIOR	PVC/EMT*
B2	3-#6, 1-#10 EGC, 1/2" OR LARGER RACEWAY	CU	THHN/THWN2	EXTERIOR	PVC/EMT*
C	3-250, 1-#4 EGC, 2" OR LARGER RACEWAY	AL	THHN/THWN	EXTERIOR	EMT/NMC/ PVC**
D	3-1/0, 1-#6 EGC, 1-1/2" OR LARGER RACEWAY	CU	THHN/THWN	EXTERIOR	NMC/EMT
E	EXISTING				

*METALLIC WHERE INTERIOR, PVC WHERE EXTERIOR
**PVC WHERE TRENCHED

COMMONWEALTH OF MASSACHUSETTS
DAVID J. COLOMBO
ELECTRICAL
No. 40426
REGISTERED PROFESSIONAL ENGINEER
01-18-2020

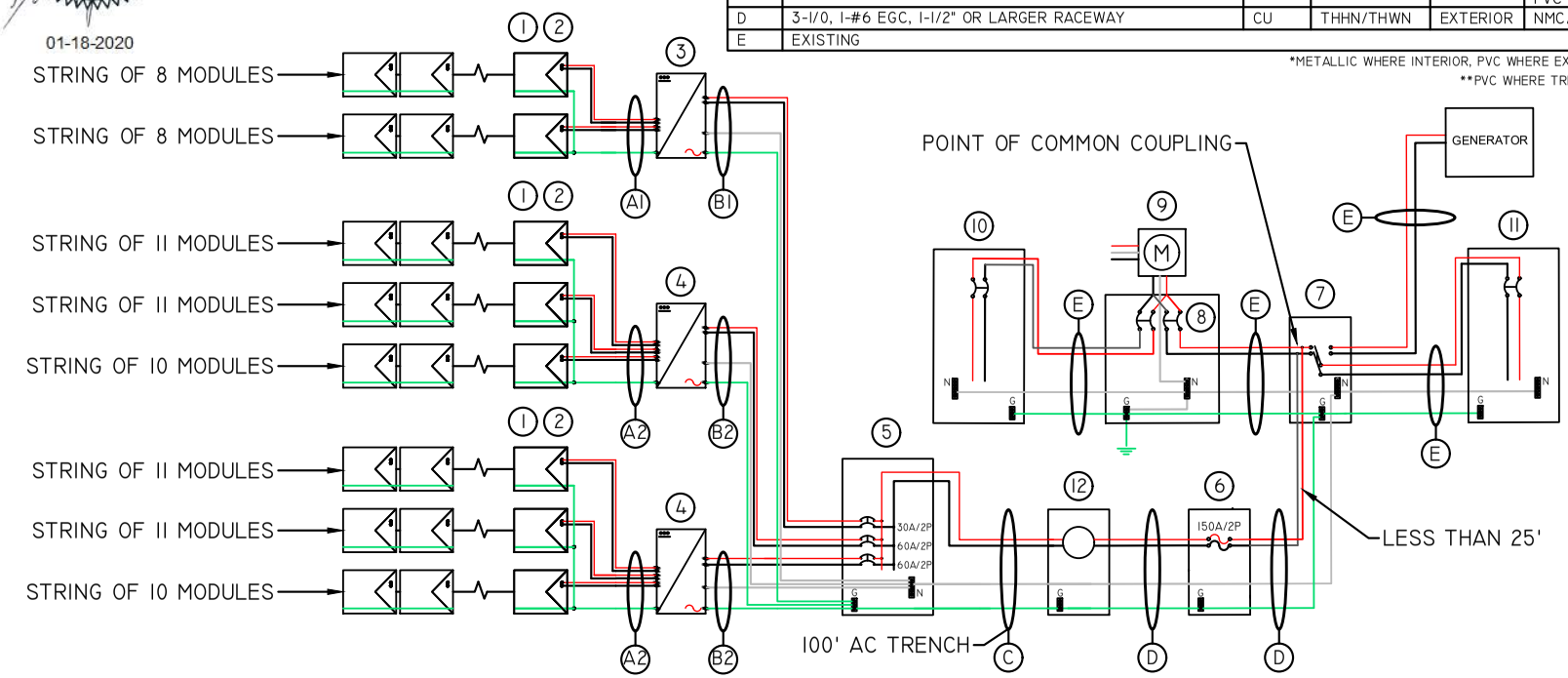

CONTRACTOR:

south mountain COMPANY
15 Red Arrow Rd, West Tisbury, MA 02575
www.SouthMountain.com • 508.693.7738

DESIGNER:

namasté SOLAR
6707 Winchester Circle, Boulder, CO 80301
888 Federal Blvd., Denver, CO 80204
www.NamasteSolar.com • 303.447.0300

NAMASTE POINT OF CONTACT:
NAME: KIM ABCOUWER
EMAIL: KIM.ABCOUWER@NAMASTESOLAR.COM
PHONE: 303.447.0300X211

OWNER:
BLUE HERON LLC
99 POND VIEW FARM ROAD
WEST TISBURY, MA 02575

SOLAR INDIVIDUAL PERMIT PACKAGE

SYSTEM ATTRIBUTES:
SYSTEM SIZE: 28.8KW
TOTAL # OF MODULES: 80
MODULE: SUNPOWER SPR-X22-360-WHT
INVERTER(S): SOLAREDGE 2 X SE10000H-US 1 X SE5000H-US
SCALE: NTS

DWG TITLE: ELECTRICAL THREE LINE

SHEET #	REVISION #
PV-E.1	02

south
mountain
COMPANY

March 25, 2020

West Tisbury Zoning Board of Appeals
1059 State Road – PO Box 278
West Tisbury MA 02575

RE: REVISED Brief to the Board

Dear Members of the Board,

We are seeking a special permit to install a ground mount solar array in the front yard 8.10-4(C) and inside the front yard set back 4.2-2(D)3 & 4.2-2(D)4. We are seeking 50' of front yard set back relief. This array will face south and be heavily screened from the road and the pond.

Neighborhood impacts:

- Environment: positive impact to the environment
- Noise: This ground mount solar array will produce no noise
- Visual impact: This ground mount will be heavily screen from both the road and the pond with a variety of native species
- Traffic impact: This project will have no impact on traffic

Sincerely,

John Guadagno
Project Manager
South Mountain Company